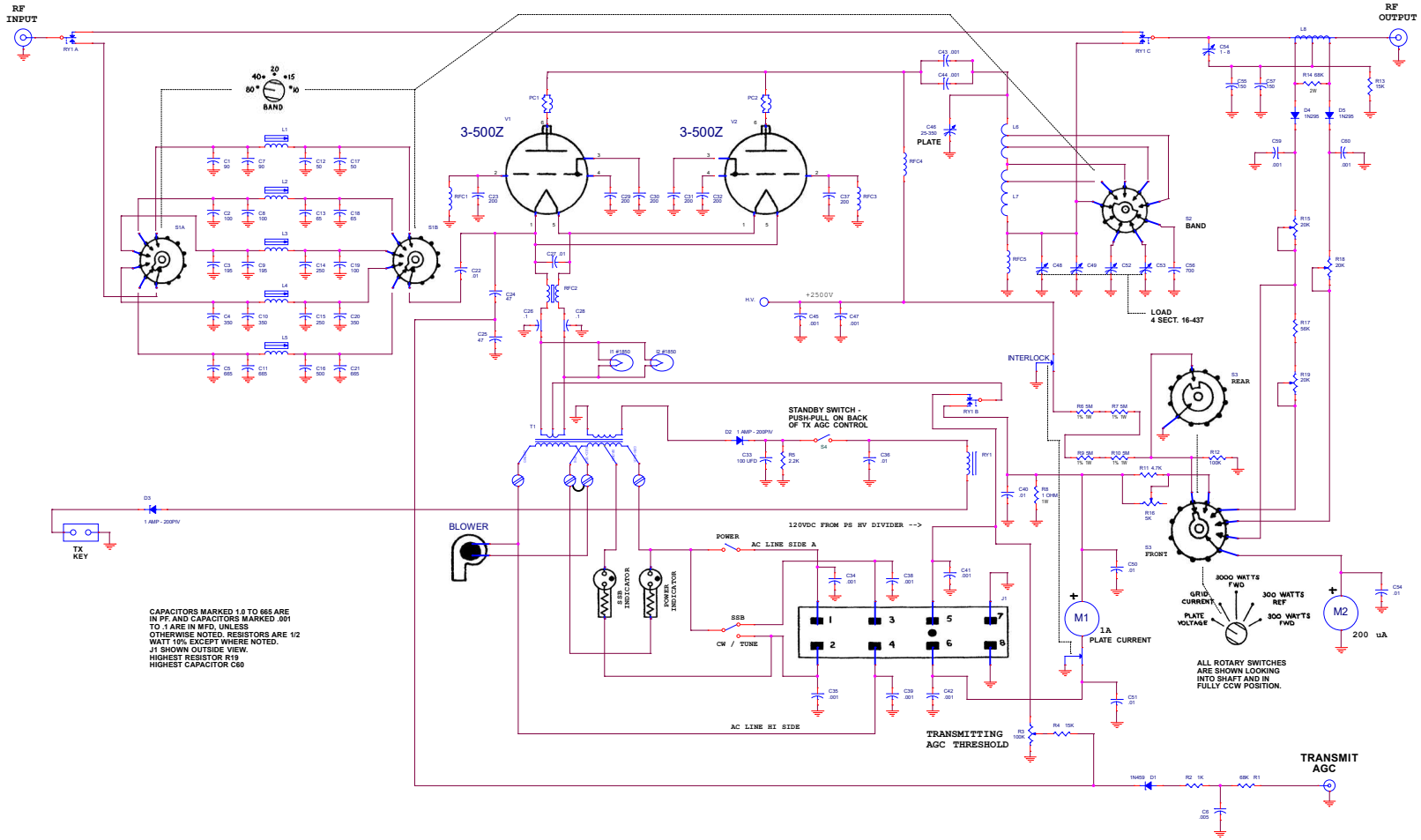

File	L-4B Factory Schematic - RF Deck		
Size D	Document Number ADVEF_001_001		Rev 1.0
Date: Wednesday, August 03, 2022	Sheet 1 of 1		